THIS DRAWING IS THE PROPERTY OF FAIRCHILD SEMICONDUCTOR CORPORATION. NO USE THEREOF SHALL BE MADE OTHER THAN AS A REFERENCE FOR PROPOSALS AS SUBMITTED TO FAIRCHILD SEMICONDUCTOR CORPORATION FOR JOBS TO BE EXECUTED IN CONFORMITY WITH SUCH PROPOSALS UNLESS THE CONSENT OF SAID FAIRCHILD SEMICONDUCTOR CORPORATION HAS PREVIOUSLY BEEN OBTAINED. NO PART OF THIS DRAWING SHALL BE COPIED OR DUPLICATED OR ITS CONTENTS DISCLOSED. THE INFORMATION CONTAINED ON THIS DRAWING IS CONFIDENTIAL AND PROPRIETARY.

REVISIONS

LTR	DESCRIPTION	E.C.N.	DATE	BY/APP'D
A	RELEASE TO DOCUMENT CONTROL	CB/030/02	25JAN2002	HTG
B	CHG DIE CENT LINE TO PKG CENT LINE. REM DATUM C AT BALL POS GEOM TOL	CB/117/02	12APR2002	HTG
C	CHANGE BALL POS TOL FR 0.10 TO 0.05	CB/346/02	21NOV2002	HTG

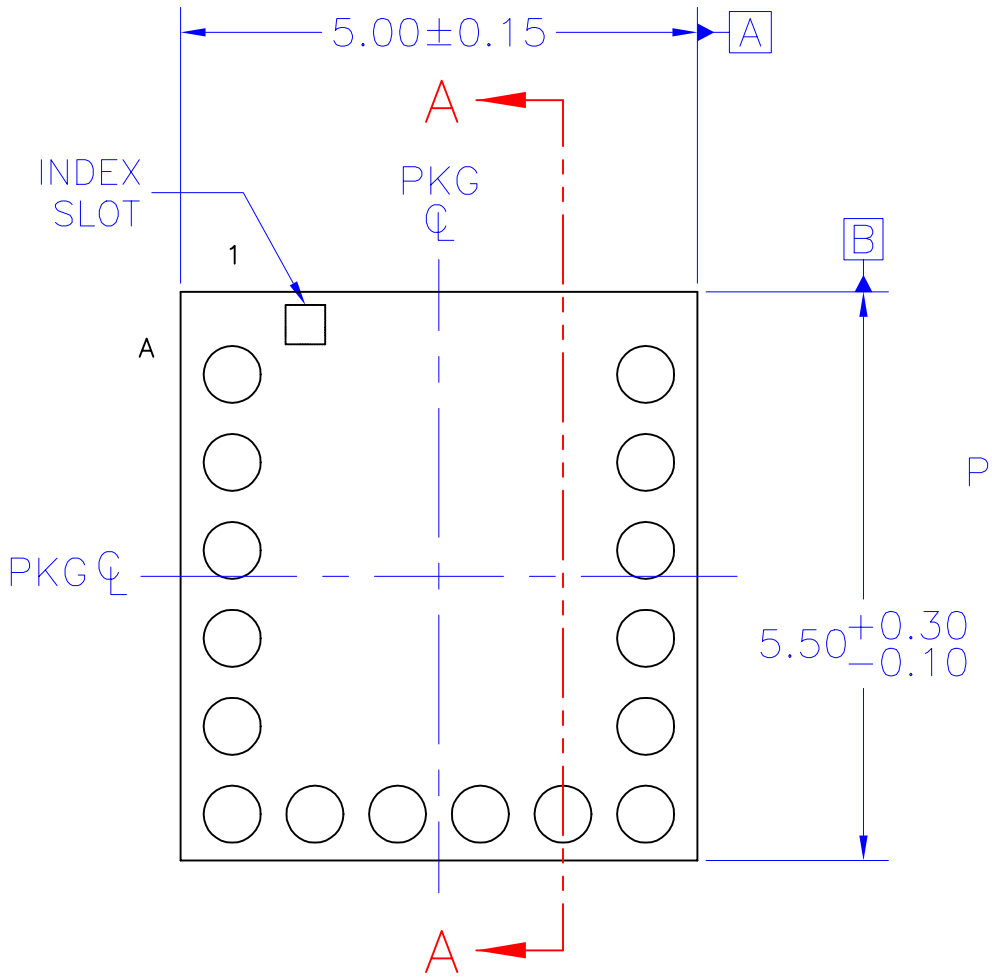

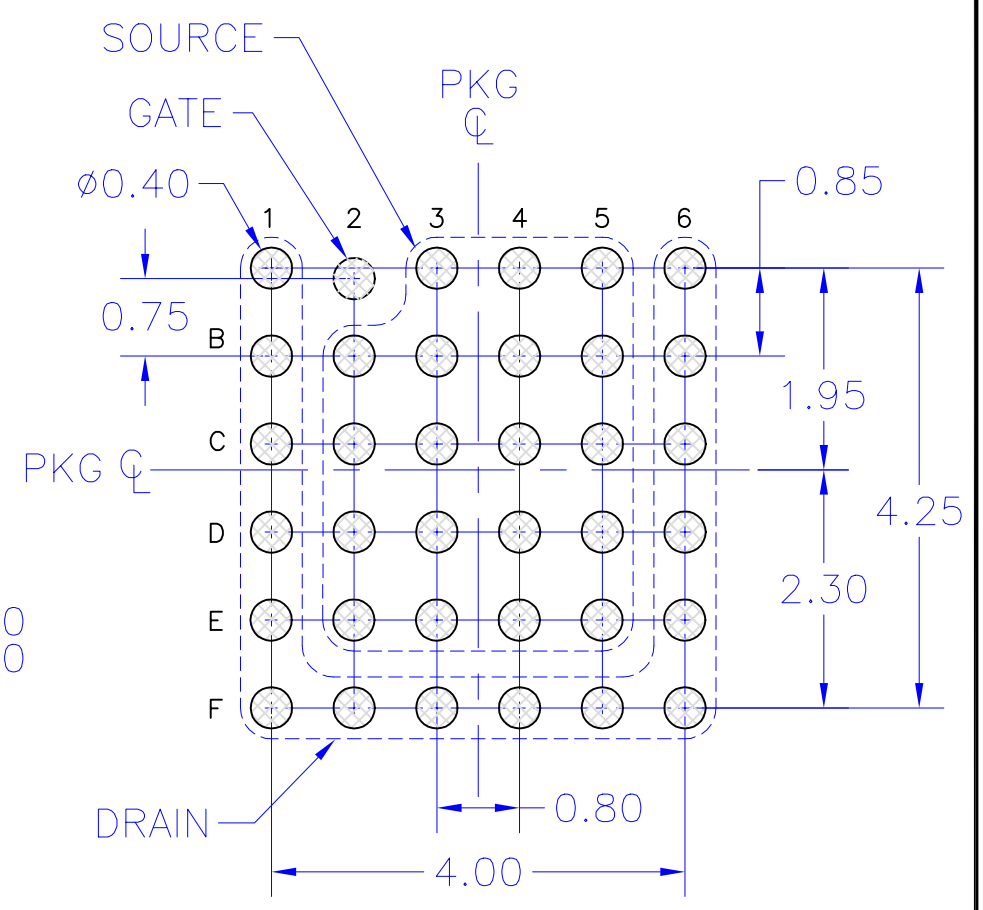

LAND PATTERN RECOMMENDATION

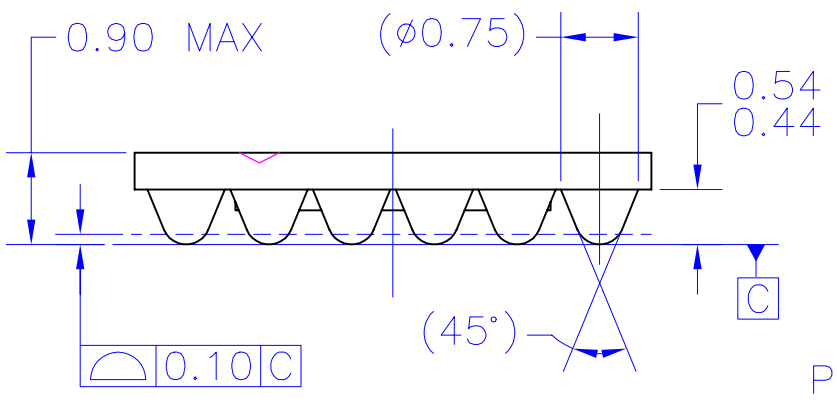

FRONT VIEW

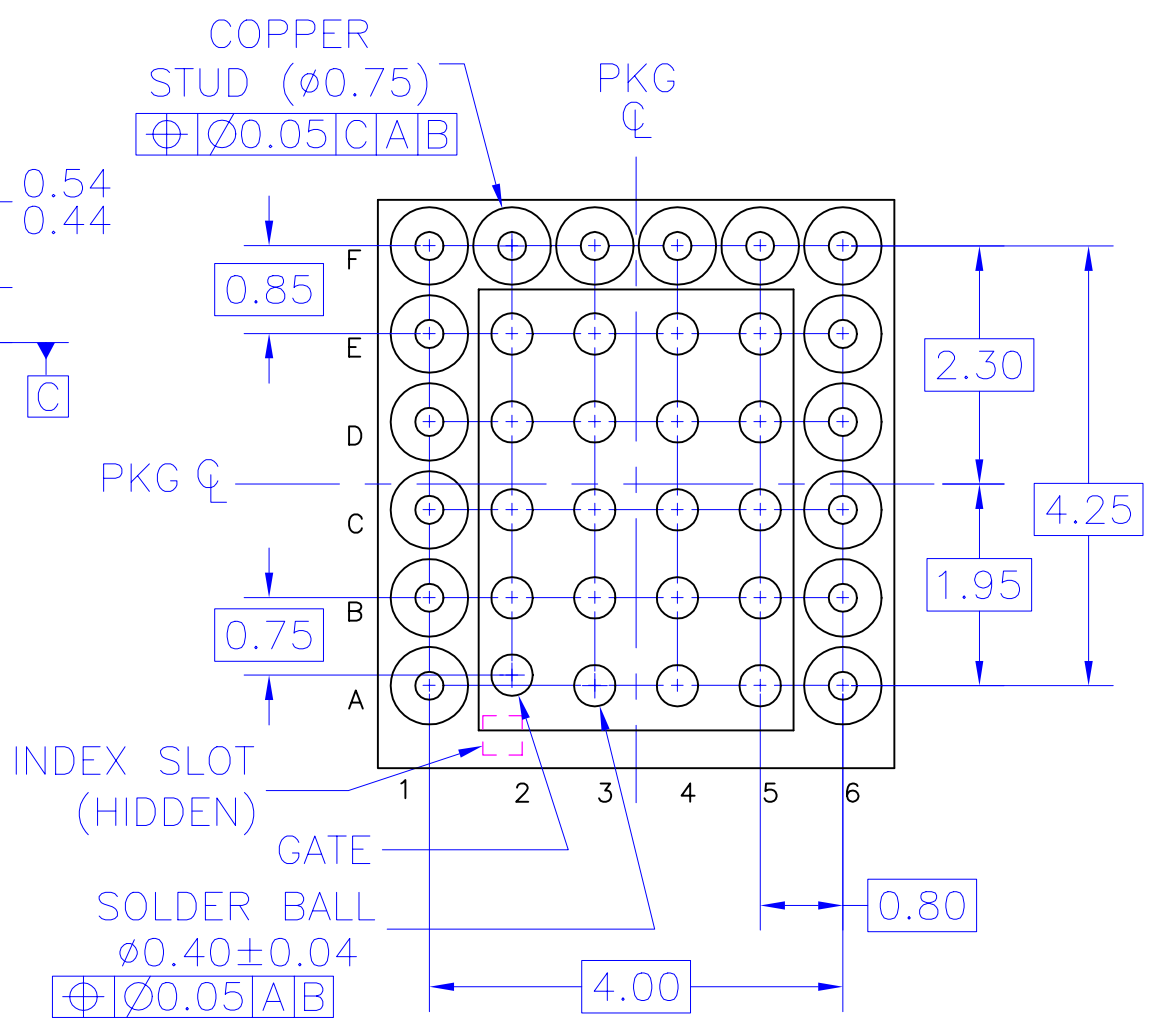

BOTTOM VIEW

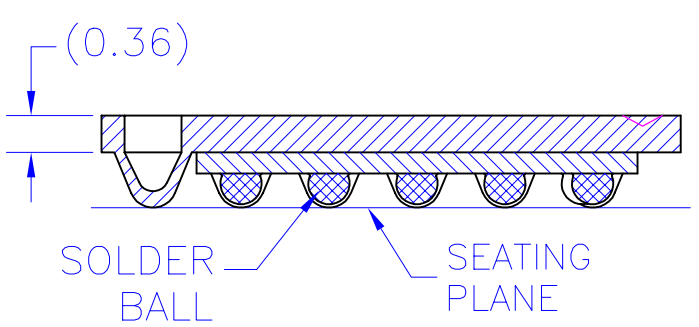

SECTION A–A
(ROTATED −90°)

NOTES: UNLESS OTHERWISE SPECIFIED

A) ALL DIMENSIONS ARE IN MILLIMETERS.

B) NO JEDEC REGISTRATION REFERENCE AS OF JULY 1999.

C) BALL CONFIGURATION TABLE

TERMINAL	DESIGNATION
A1,B1,C1,D1,E1,F1,F2,F3, F4,F5,F6,E6,D6,C6,B6,A6	DRAIN
A3,A4,A5,B2,B3,B4,B5,C2,C3, C4,C5,D2,D3,D4,D5,E2,E3,E4,E5	SOURCE
A2	GATE

APPROVALS	DATE
DRAWN: J. GOMEZ	23JAN2003
CHECKED: H. GRANADA JR.	
APPROVED: M. GESTOLE	
G.S. BAJE	

FAIRCHILD SEMICONDUCTOR™ CEBU PHILIPPINES

20BALL/16STUD, MOSFET BGA, 5X5.5MM BODY, DTILA

PROJECTION INCH [MM]

SCALE	SIZE	DRAWING NUMBER	REV
15:1	A3	MKT–BGA20A	C

FORMERLY: N/A SHEET : 1 OF 1

BGA20AREVC