THIS DRAWING IS THE PROPERTY OF FAIRCHILD SEMICONDUCTOR CORPORATION. NO USE, REPRODUCTION OR DISCLOSURE OF THE INFORMATION CONTAINED HEREIN IS PERMITTED TO FAIRCHILD SEMICONDUCTOR CORPORATION FOR JOBS TO BE EXECUTED IN CONFORMITY WITH SUCH PROPOSALS UNLESS THE CONSENT OF SAID FAIRCHILD SEMICONDUCTOR CORPORATION HAS PREVIOUSLY BEEN OBTAINED. NO PART OF THIS DRAWING SHALL BE COPIED OR DUPLICATED OR ITS CONTENTS DISCLOSED. THE INFORMATION CONTAINED ON THIS DRAWING IS CONFIDENTIAL AND PROPRIETARY.

REVISIONS

LTR	DESCRIPTION	E.C.N.	DATE	BY/APP'D
F	NEW MARKTING DWG.		Jan-1999	FEITAN
2	UPDATED DWG. TO CURRENT STD. FORMAT.		14-Mar-2007	J Chan

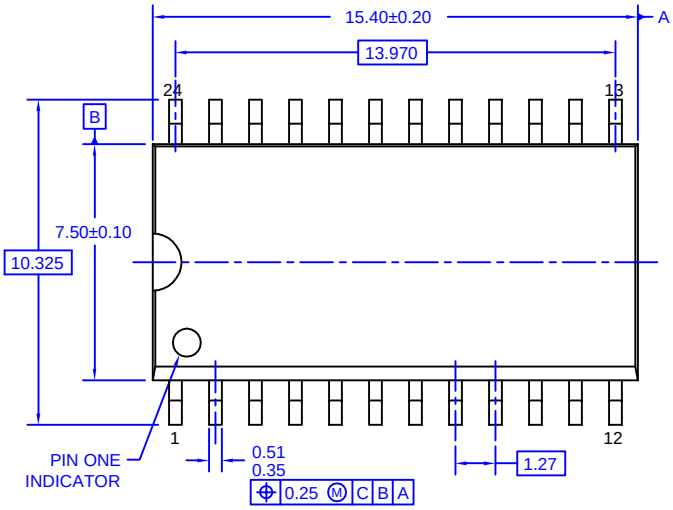

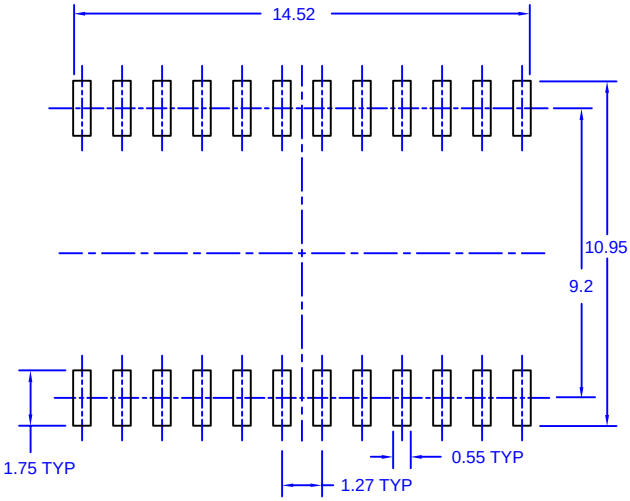

LAND PATTERN RECOMMENDATION

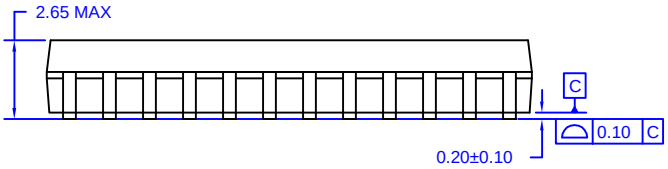

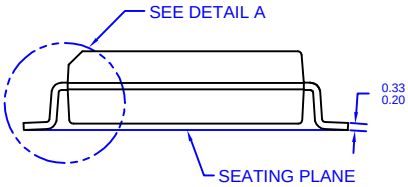

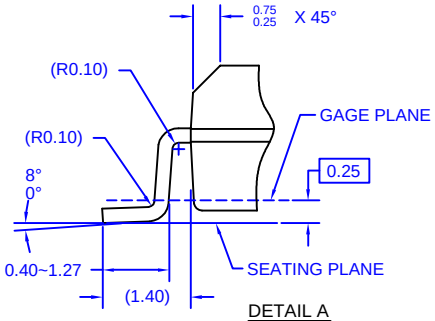

DETAIL A
SCALE: 2:1

NOTES: UNLESS OTHERWISE SPECIFIED

A) THIS PACKAGE CONFORMS TO JEDEC MS-013, ISSUE E, DATED SEPT 2005.
B) ALL DIMENSIONS ARE IN MILLIMETERS.
C) DIMENSIONS DO NOT INCLUDE MOLD FLASH OR BURRS.
D) LANDPATERN STANDARD: SOIC127P1030X265-24L
E) DRAWING FILENAME: MKT-M24BREV2

M24BREV2

APPROVALS		DATE
DRAWN	J Chan	13 Mar 07
CHTG. CHK	H.ALLEN	20 Mar 07
ENGR. CHK		

FAIRCHILD SEMICONDUCTOR®
Bayan Lepas, FIZ, 11900, Penang, Malaysia.

24LD, SOIC, JEDEC MS-013, 0.300" WIDE BODY

PROJECTION

SCALE	SIZE	DRAWING NUMBER	REV
N/A	C	MKT-M24B	2

DO NOT SCALE DRAWING | SHEET 1 of 1