THIS DRAWING IS THE PROPERTY OF FAIRCHILD SEMICONDUCTOR CORPORATION. NO USE THEREOF SHALL BE MADE OTHER THAN AS A REFERENCE FOR PROPOSALS AS SUBMITTED TO FAIRCHILD SEMICONDUCTOR CORPORATION FOR JOBS TO BE EXECUTED IN CONFORMITY WITH SUCH PROPOSALS UNLESS THE CONSENT OF SAID FAIRCHILD SEMICONDUCTOR CORPORATION HAS PREVIOUSLY BEEN OBTAINED. NO PART OF THIS DRAWING SHALL BE COPIED OR DUPLICATED OR ITS CONTENTS DISCLOSED. THE INFORMATION CONTAINED ON THIS DRAWING IS CONFIDENTIAL AND PROPRIETARY.

REVISIONS

NBR	DESCRIPTION	DATE	BY/APP'D
A	RELEASED TO DCC	16OCT2000	J.K. / FSPM
2	* REMOVE SITE ADDRESS * CHANGE FOLLOWING DIM IN ORDER TO MEET NFME POD: FROM 3.22 TO 3.10 FROM 3.48 TO 3.50 FROM 0.25 TO 0.21 FROM 22.86 TO 22.96 FROM 8.12 TO 8.25 FROM 6.48 TO 6.50	14MAY2008	SD LEE / FSSZ

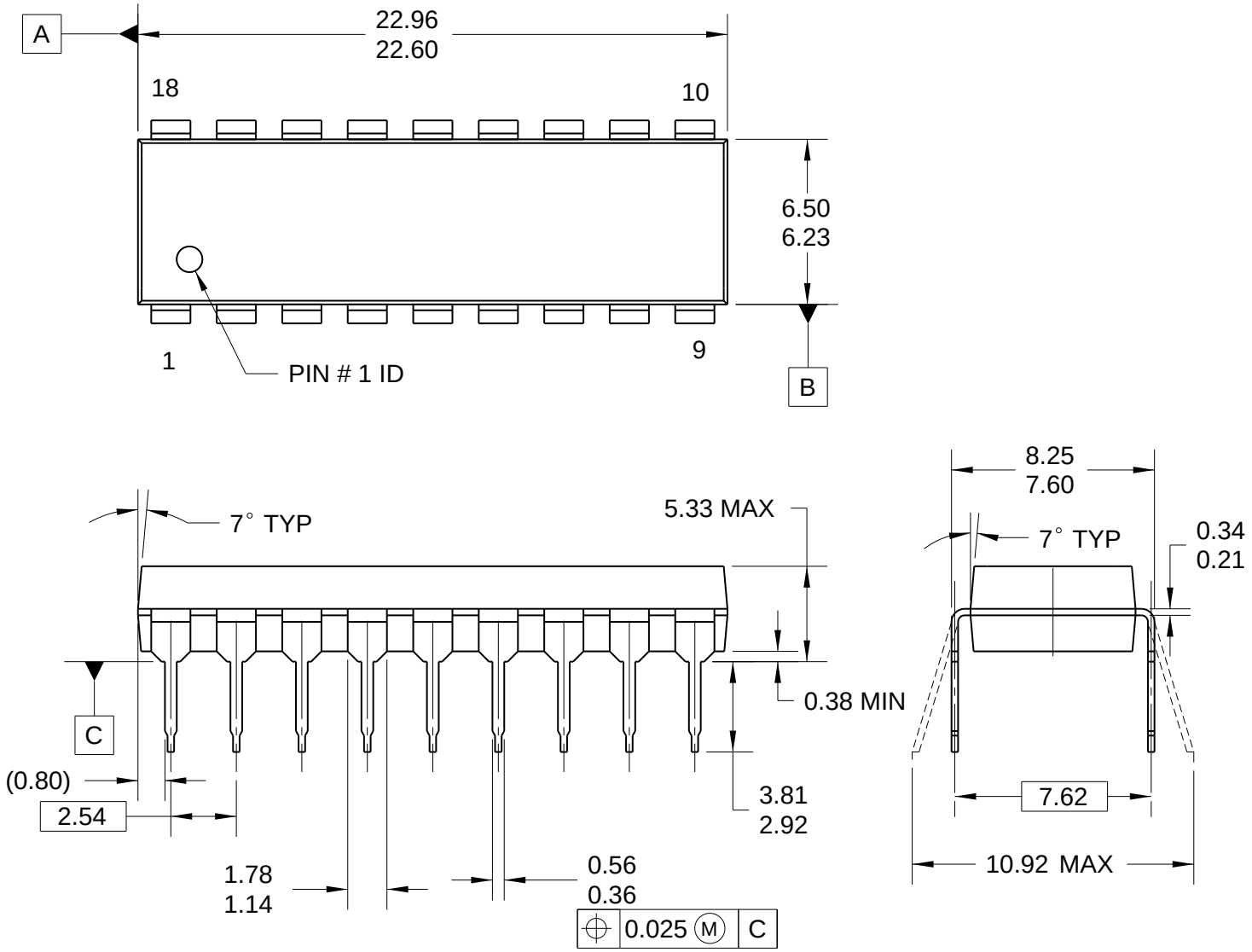

NOTES:

A. CONFORMS TO JEDEC MS-001 VARIATION AC.
B. ALL DIMENSIONS ARE IN MILLIMETERS.
C. DIMENSIONS ARE EXCLUSIVE OF BURRS, MOLD FLASH AND TIE BAR PROTRUSIONS.
D. DIMENSION AND TOLERANCING AS PER ASME Y14.5-1994.
E. DRAWING FILE NAME: N18BREV2

APPROVALS	DATE
DRAWN: BOBOY MALDO	14MAY2008
CHECKED: SD LEE	
APPROVED: BY HUANG	
APPROVED: HOWARD ALLEN	

FAIRCHILD SEMICONDUCTOR™

18LD, MDIP, JEDEC MS-001, 0.300" WIDE

PROJECTION	SCALE	SIZE	DRAWING NUMBER	REV
[MM] INCH	1:1	N/A	MKT-N18B	2

FORMERLY: N/A

SHEET : 1 OF 1