7PM-AA Package Dimensions

FAIRCHILD SEMICONDUCTOR™

7PM-AA (FS PKG CODE BD)

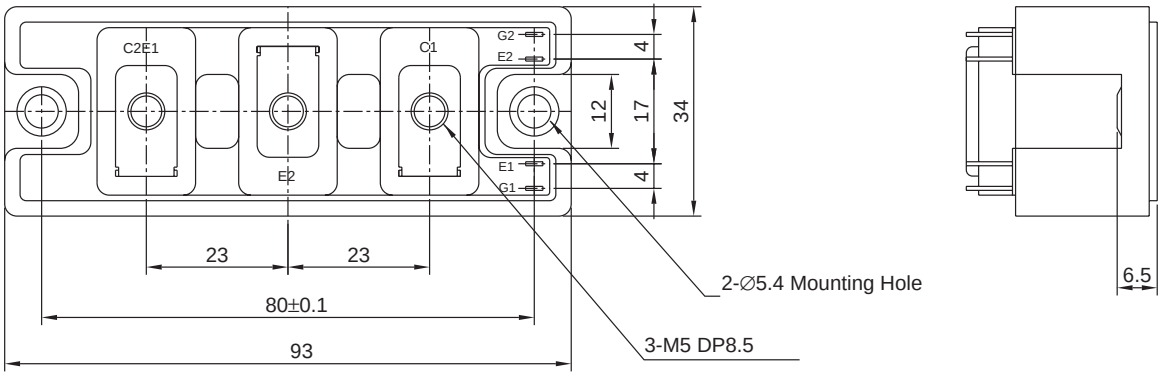

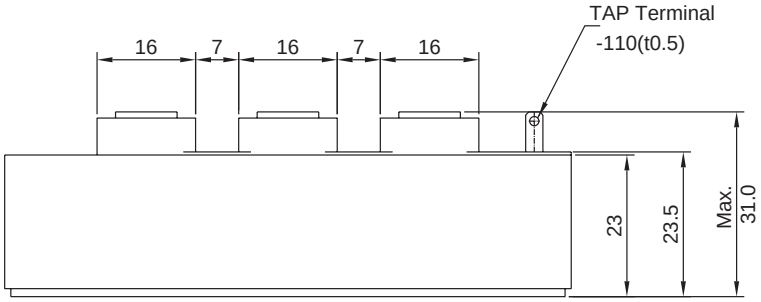

Dimensions in Millimeters