TO-3PN Package Dimensions

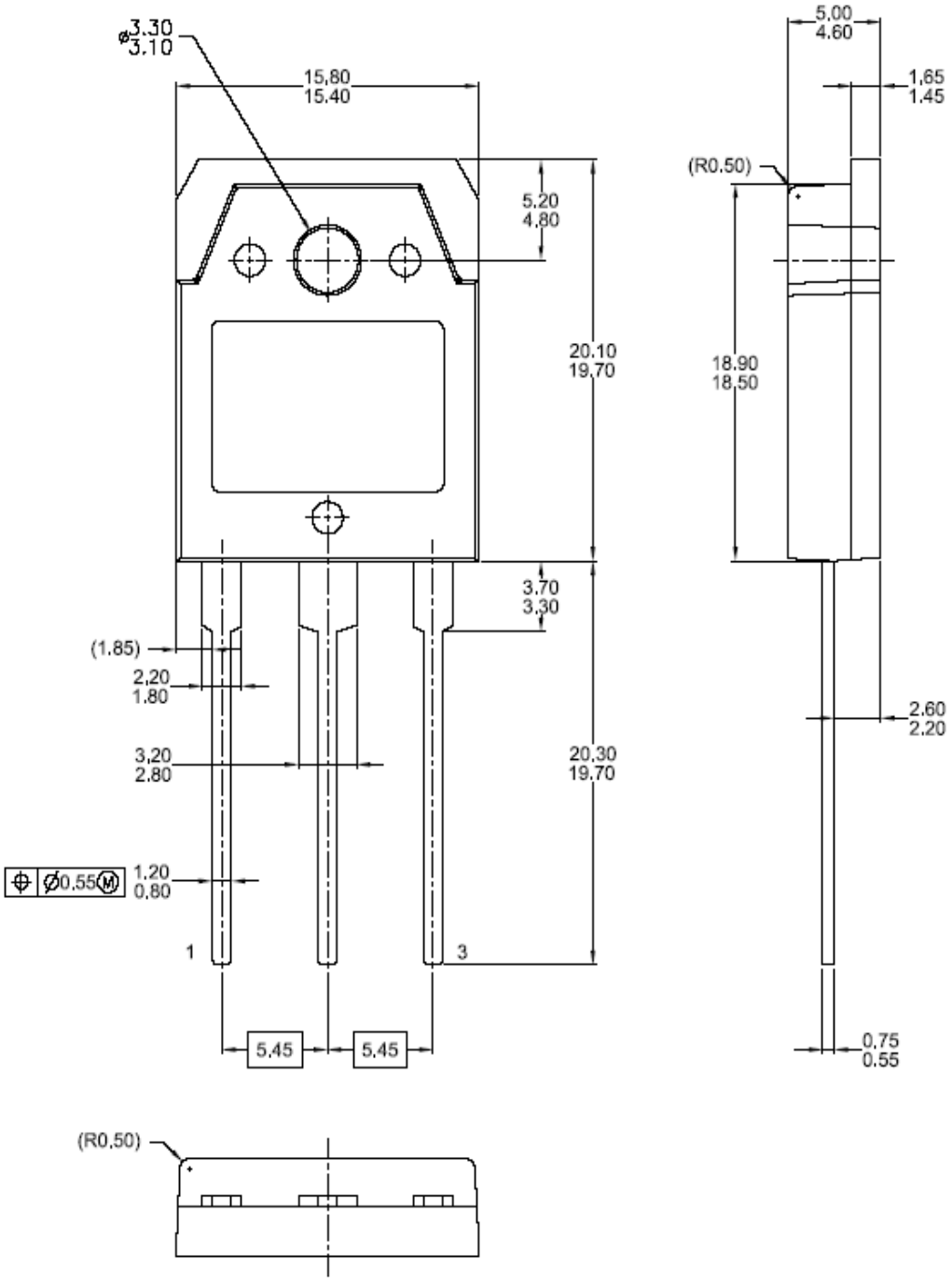

Dimensions in Millimeters

©2006 Fairchild Semiconductor Corporation